PRODUCT DATA SHEET

# SLIM FLEXIBLE CATHODE LIGHT STRIP

## (Models FCLS-Slim & HFCLS-Slim)

c UL US LISTED

Patent 7,293,895
Patent 6,454,431
British Patent No. GB2431463B

Project: Flavor Paper • Brooklyn, NY (Lumen Award Winner 2011)
Designer: Lighting Workshop

Photo: Boone Speed

The Slim Flexible Cathode Light Strip (FCLS-Slim) effectively brings cold cathode lighting into the 21st century, and in the smallest package ever available. All the best features of shadowless long-life, cold-cathode fluorescent lighting have been engineered into a simple, self-contained, discreet, flexible luminaire. The FCLS-Slim combines incredibly low electrical power consumption, premium illumination, and long lamp life, eliminating the need for the bulky dimensions, and inefficiencies associated with traditional component-based cold-cathode lighting systems.

Each beautifully-designed luminaire can conform to almost any shape or size (straight, curved or bent) of Cathode Lighting Systems' custom or standardized lamps, in an almost infinite variety of deeply-saturated colors and high color-rendering whites hues. The Slim Flexible Cathode Light Strip (FCLS-Slim) is completely modular, and is the smallest cold cathode luminaire available in the world (only 1 5/8" wide and 2 3/8" tall, including the lamp). The FCLS-Slim installs in minutes, and offers the convenience of a simple modular connection method between luminaires. Lamps simply snap in and out, and all luminaires are provided as standard, with integral, inaudible 1% electronic dimming ballasts.

With lamp life as long as 100,000 field-proven hours and watt consumption as low as 5.5 watts per foot, this phenomenally dependable technology is the perfect LEED-compliant luminaire for all your indirect cove applications.

***"FLEXIBLE CATHODE LIGHT STRIP...BECAUSE THE WORLD IS ROUND"***

CATHODE LIGHTING SYSTEMS
INNOVATIVE LIGHTING TECHNOLOGY®

8020 Queenair Drive, Gaithersburg, MD 20879 USA | phone: 301 921 4120 | fax: 301 963 3050
email: info@CathodeLightingSystems.com | website: www.CathodeLightingSystems.com



©2012 Cathode Lighting Systems Inc.

## FEATURES & BENEFITS

- Illumination is seamless from end to end, with no dark spots or socket shadows
- Each luminaire can flex and conform to almost any shape lamp Cathode Lighting Systems manufactures up to 7.5 feet in length
- Reliable, ultra long-life, high color-rendering T6 cold cathode lamps (up to 100,000 hours of life)
- Dimmable integral 1% electronic ballasts offer inaudible operation and a power factor >.95
- Up to 560 feet of luminaires on one 20-amp circuit @ 277 volts, or 245 feet of luminaires @120 volts (high-efficiency model HFCLS-Slim)
- Lamps snap in and out of luminaires via innovative zero-clearance lamp bases and lampholders and lock in place
- Very small profile - only 1 5/8" wide and 2 5/8" tall with lamp installed
- Extremely contractor-friendly and beautifully engineered
- Luminaires daisy-chain together utilizing quick-connect wiring cables
- Wide color selection, including 11 ultra stable white hues
- Available in standard output (up to 492 lumens per foot / FCLS-Slim) or high-efficiency (up to 328 lumens per foot / HFCLS-Slim)

c UL US LISTED

## DIMENSIONAL INFORMATION & MOUNTING RECOMMENDATIONS

**Please note:**
Cove width must be increased if the curvature of the lamps is less than a 72" radius. Please contact the factory for assistance with this calculation.

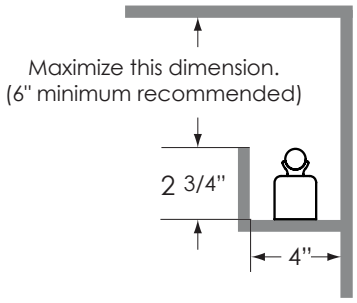


**Note:**
It is recommended that the inside of cove be finished, and painted matte white for maximum reflectance.

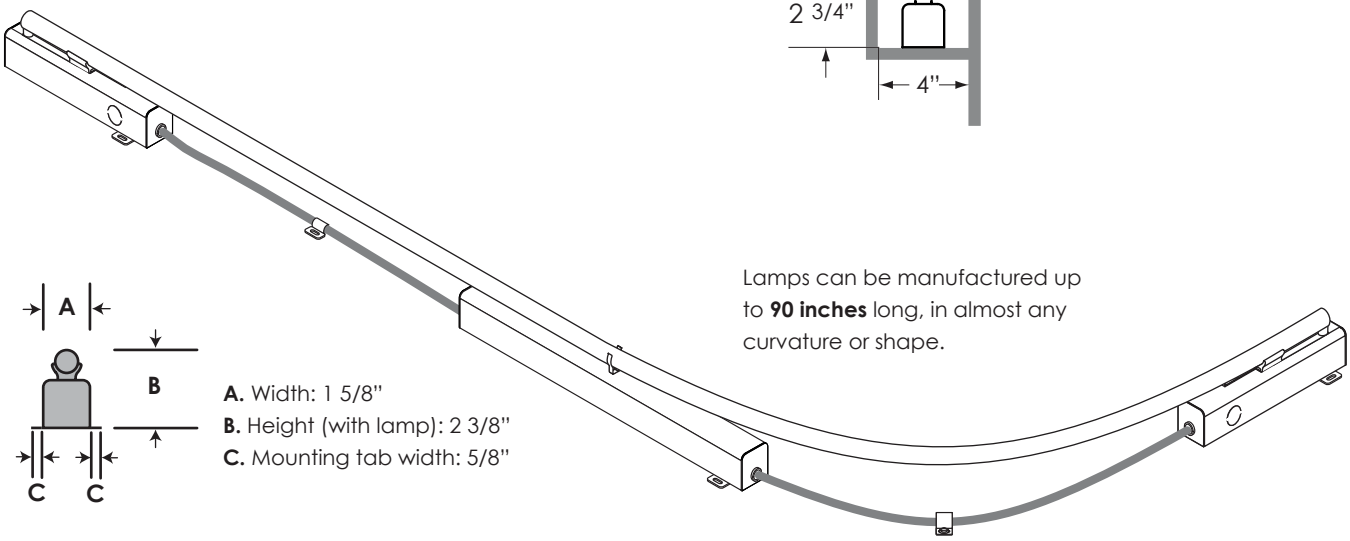


**A.** Width: 1 5/8"
**B.** Height (with lamp): 2 3/8"
**C.** Mounting tab width: 5/8"

Lamps can be manufactured up to **90 inches** long, in almost any curvature or shape.


8020 Queenair Drive, Gaithersburg, MD 20879 USA | phone: 301 921 4120 | fax: 301 963 3050
email: info@CathodeLightingSystems.com | website: www.CathodeLightingSystems.com
©2012 Cathode Lighting Systems Inc.

CATHODE LIGHTING SYSTEMS
INNOVATIVE LIGHTING TECHNOLOGY®

## LAMP COLORS, LUMENS & EFFICACIES

**WHITE LAMPS:** All whites are triphosphor with a CRI of 92

| Cat. No. | Description | FCLS-Slim Lumens/ft | HFCLS-Slim Lumens/ft | Efficacy |
|---|---|---|---|---|
| 19TC | Candelight - 1900°K | 287 | 191 | 77.2 lumens/watt |
| 23TC | Golden White - 2300°K | 420 | 280 | 77.2 lumens/watt |
| 24TC | Sunrise - 2400°K | 466 | 311 | 77.2 lumens/watt |
| 25TC | Incandescent - 2500°K | 453 | 302 | 77.2 lumens/watt |
| 27TC | Warmtone - 2700°K | 407 | 271 | 77.2 lumens/watt |
| 29TC | Warm White - 2900°K | 470 | 313 | 77.2 lumens/watt |
| 30TC | Warmlight - 3000°K | 480 | 320 | 76.2 lumens/watt |
| 35TC | Soft white - 3500°K | 492 | 328 | 78.2 lumens/watt |
| 42TC | Satin white - 4200°K | 476 | 317 | 75.3 lumens/watt |
| 63TC | Ice white - 6300°K | 462 | 308 | 73.2 lumens/watt |
| 83TC | Daylight - 8300°K | 458 | 305 | 75.4 lumens/watt |

**COLORED LAMPS:**

Pink White (PW)
Deep Blue (DB)
Sky Blue (SB)
Aqua (AQ)
Turquoise (TQ)
Green (GR)
Bright Green (BG)
Gold (GD)
Yellow (YL)
Salmon Pink (SP)
Purple (PR)
Hot Pink (HP)
Red (RD)
Orange (OR)

Photometric information: All photometric values provided by LTL (Luminaire Testing Laboratories, Allentown, PA and Cathode Lighting Systems Inc. USA).

## ORDERING INFORMATION

[ ] – [ ] – [ ] – [ ] – [ ]

**Model:**

**FCLS-Slim**
Slim Flexible
Cathode Light Strip
(standard light output)

**HFCLS-Slim**
High-efficiency
Slim Flexible
Cathode Light Strip
(reduced light output)

**Length:**

Round up to the nearest foot

**Lamp Type:**

**S** Straight
**C** Curved

**Lamp Color:**

See color chart above for correct catalog numbers

If color has not been chosen at time of specification, please write: **TBD**

**Voltage:**

**120** 120 volts
**277** 277 volts

Example: One circular light cove, 157 feet in circumference, using the standard-output FCLS-Slim luminaire. Lamp color is 3500°K soft white. Operating voltage is 120 volts.

**FCLS-Slim - 157 - C - 35TC - 120**

Model FCLS-Slim
Length of 157 feet
Curved lamps
3500°K soft white lamps
120 volts



8020 Queenair Drive, Gaithersburg, MD 20879 USA | phone: 301 921 4120 | fax: 301 963 3050
email: info@CathodeLightingSystems.com | website: www.CathodeLightingSystems.com

©2012 Cathode Lighting Systems Inc.

## ELECTRICAL INFORMATION

| Model | Primary voltage | Primary amps / VA | Watts per foot* | Dimming protocol | Maximum luminaires per 15 or 20A circuit* | Maximum lamp footage per 15 or 20A circuit* |
|---|---|---|---|---|---|---|
| FCLS-Slim | 120 volts | .46 amps / 55 VA | 7.3 | 2-wire | 26 @ 120 volts | 182 feet |
| FCLS-Slim | 277 volts | .2 amps / 55 VA | 7.3 | 2-wire | 60 @ 277 volts | 420 feet |
| HFCLS-Slim | 120 volts | .34 amps / 41 VA | 5.5 | 2-wire | 35 @ 120 volts | 245 feet |
| HFCLS-Slim | 277 volts | .15 amps / 42 VA | 5.6 | 2-wire | 80 @ 277 volts | 560 feet |

*****Values are based on all luminaire lengths at 7'6". Actual values may vary depending on the selection of luminaire lengths. Connection cable ratings: #14 AWG, maximum allowable current for this cable is 12 amps, **DO NOT EXCEED MAXIMUM NUMBER OF LUMINAIRES PER CIRUIT.**

**Dimming:** Reverse-phase electronic low-voltage dimmers (example: Lutron NTELV series) are highly recommended for optimal low-end dimming performance and inaudible ballast operation. Forward phase low-voltage magnetic dimmers may also be utilized, at reduced low-end dimming performance.

## SPECIFICATIONS

**Luminaire:** Luminaires shall be Cathode Lighting Systems model FCLS-Slim (Slim Flexible Cathode Light Strip) or HFCLS-Slim (High-Efficiency Slim Flexible Cathode Light Strip), and shall provide a continuous, uninterrupted line of light when installed as instructed. Luminaires shall be pre-assembled, satin-anodized .050" aluminum with a snap-fit covers and one (1) integral, dimmable electronic ballast. Luminaires shall flex and conform to lamp shapes and lengths required and shall have integral modular connection devices for electrical connection to each other and the branch circuit.

**Lamps:** Shall be 100,000-hour (HFCLS-Slim) or 75,000 hour (FCLS-Slim) T6 cold-cathode fluorescent, color as specified. Lamps shall be provided with single-pin bases for zero-clearance snap-in installation and removal from lampholders. Lamps that are hard-wired to the power supply are not acceptable alternatives. Lamps shall be manufactured with butt-sealed ends and in custom lengths/curvatures to follow the architectural details and to provide complete illumination at each lamp end, and shall have provisions to be locked into place, utilizing the luminaire's lamp-locking clips. Manufacturer shall provide independent test lab reports to substantiate lumen output.

**Integral Ballasts:** Shall be electronic 990-volt, instant-start cold cathode, class P thermally protected, and shall automatically de-energize upon removal of lamps from the luminaire. Ballast power factor shall be >.95.

**Dimming:** Luminaires shall be dimmable via 2-wire reverse-phase electronic low-voltage dimming (1%) or 2-wire forward phase 2-wire (low voltage magnetic) dimming system (20% dimming). Reverse phase dimming is recommended in noise-sensitive environments.

**Approvals:** Luminaire shall be UL and cUL-listed under UL category: IEUZ Fluorescent surface-mounted luminaires.

**Manufacturer:** Shall be Cathode Lighting Systems Inc., Gaithersburg, MD - USA (800) 551-5012.
Website: www:CathodeLightingSystems.com


8020 Queenair Drive, Gaithersburg, MD 20879 USA | phone: 301 921 4120 | fax: 301 963 3050
email: info@CathodeLightingSystems.com | website: www.CathodeLightingSystems.com
©2012 Cathode Lighting Systems Inc.

# Lamp Color & Lumen Output Information

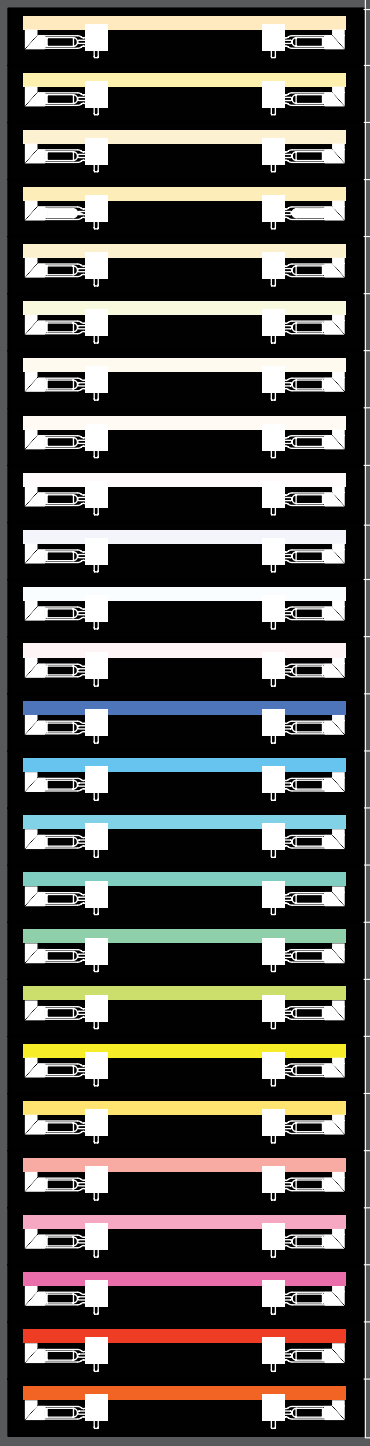

| Lamp Color | Kelvin Temperature | Catalog Number | Lumens per foot | |
|---|---|---|---|---|
| | | | FCLS-Slim | HFCLS-Slim |
| Candlelight | 1900° K | 19TC | 287 | 191 |
| Golden White | 2300° K | 23TC | 420 | 280 |
| Sunrise | 2400° K | 24TC | 466 | 311 |
| Incandescent | 2500° K | 25TC | 453 | 302 |
| Warmtone | 2700° K | 27TC | 407 | 271 |
| Warm White | 2900° K | 29TC | 470 | 313 |
| Warmlight | 3000° K | 30TC | 480 | 320 |
| Soft White | 3500° K | 35TC | 492 | 328 |
| Satin White | 4200° K | 42TC | 476 | 317 |
| Ice White | 6300° K | 63TC | 462 | 308 |
| Day Light | 8300° K | 83TC | 458 | 305 |
| Pink White | N/A | PW | 302 | 201 |
| Deep Blue | N/A | DB | 351 | 234 |
| Sky Blue | N/A | SB | 428 | 285 |
| Aqua | N/A | AQ | 402 | 268 |
| Turquoise | N/A | TQ | 495 | 330 |
| Green | N/A | GR | 479 | 319 |
| Bright Green | N/A | BG | 503 | 335 |
| Gold | N/A | GD | 254 | 169 |
| Yellow | N/A | YL | 273 | 182 |
| Salmon Pink | N/A | SP | 279 | 186 |
| Purple | N/A | PR | 251 | 167 |
| Hot Pink | N/A | HP | 276 | 184 |
| Red | N/A | RD | 120 | 80 |
| Orange | N/A | OR | 201 | 134 |

Photometric information: All photometric values provided by LTL (Luminaire Testing Laboratories, Allentown, PA) and Cathode Lighting Systems Incorporated, USA.


8020 Queenair Drive, Gaithersburg, MD 20879 USA | phone: 301 921 4120 | fax: 301 963 3050
email: info@CathodeLightingSystems.com | website: www.CathodeLightingSystems.com
©2012 Cathode Lighting Systems Inc.